FOUNTAIN NOZZLES

FINGER JET NOZZLE

- Creates a fan shaped spray of solid streams of water.
- Water level independent.
- Moderate level of noise level.
- Stainless steel finish, female threaded connection.

Ref. Code	Product Description
ASFJN25SS	Finger Jet Nozzle with 9 Jets 1" in SS
ASFJN40SS	Finger Jet Nozzle with 9 Jets 1 1/2" in SS

TECHNICAL SPECIFICATION

MODEL	ASFJN25SS		ASFJN40SS	
CONNECTION IN INCH	1"		1 1/2"	
ORIFICE IN mm	2		5	
FLOW DETAILS	Flow (LPM)	Head (Mtr)	Flow (LPM)	Head (Mtr)
Spray Height in Meter				
1	25.8	0.9	126.2	0.7
1.5	31.8	1.3	158.7	1
2	36.1	1.6	183.7	1.3
2.5			212.5	1.8
3			227.5	2.1
3.5			250	2.4
4			281.2	2.9

Noise: Visibility: Splash/Mist: Wind Stability: Aeration effect:

FAN JET NOZZLE

- Creates a fan shaped spray like sheet of water.
- Water level independent.
- Moderate level of noise level.
- Stainless steel finish, male threaded connection.

Ref. Code	Product Description
ASFAN25SS	1" Fan Jet Nozzle in SS
ASFAN40SS	1 1/2" Fan Jet Nozzle in SS

TECHNICAL SPECIFICATION

MODEL	ASFAN25SS		ASFAN40SS	
CONNECTION IN INCH	1"		1 1/2"	
ORIFICE IN mm	4		6	
FLOW DETAILS	Flow (LPM)	Head (Mtr)	Flow (LPM)	Head (Mtr)
Spray Height in Meter				
0.5	50.7	0.4	89.1	0.5
1	80.3	1	133.1	0.8
1.5	104.5	1.6	171.7	1.2
2	112.5	2.2	202.8	1.6
2.5	137.2	2.8	232.8	2
3	154.1	3.4	258.8	2.5
3.5			287	2.9
4			460.3	3.3

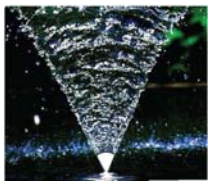

Noise: Visibility: Splash/Mist: Wind Stability: Aeration effect:

FOUNTAIN NOZZLES

CLEAR STREAM NOZZLE

- Creates a fine solid stream of water with angle adjustability smaller orifice nozzles are more subject to wind & clogging.
- Water level independent.
- Very Low noise level.
- Adjustable by 15° off center axis
- Stainless steel finish, comes with adjustable ball joint up to 1 ½" Ø

Ref. Code	Product Description
ASCSN12SS	1/2" Clear Stream Nozzle in SS
ASCSN20SS	3/4" Clear Stream Nozzle in SS
ASCSN25SS	1" Clear Stream Nozzle in SS
ASCSN40SS	1 1/2" Clear Stream Nozzle in SS
ASCSN50SS	2" Clear Stream Nozzle in SS

TECHNICAL SPECIFICATION

MODEL	ASCSN6SS		ASCSN10SS		ASCSN12SS		ASCSN25SS		ASCSN40SS	
CONNECTION IN INCH	1/4"		3/8"		1/2"		1"		1 1/2"	
ORIFICE IN mm	4		6		10		14		20	
FLOW DETAILS	Flow (LPM)	Head (Mtr)	Flow (LPM)	Head (Mtr)	Flow (LPM)	Head (Mtr)	Flow (LPM)	Head (Mtr)	Flow (LPM)	Head (Mtr)
Spray Height in Meter										
0.5	2.8	0.6	6.7	0.7	19.3	0.8	39.7	0.7	73.7	0.7
0.75	3.5	1	8.2	1	23.5	1.2	47.7	1		
1	4.1	1.2	9.3	1.3	27.2	1.4	54.2	1.3	102.5	1.1
1.5							66.5	1.9	130	1.9
2							75.8	2.4	148.7	2.4
2.5							86.6	3.1	168.7	3.1
3							94	3.7	183.7	3.6
3.5									198.7	4.2
4									212.5	4.8

Noise: ●●●●● Visibility: ●●●●● Splash/Mist: ●●●●● Wind Stability: ●●●●● Aeration effect: ●●●●●

FOAM NOZZLE – OA

- Creates foamy stream of water.
- Water level independent.
- A column of frothy aerated water recommended for small & medium display.
- Plastic body with SS cover, male threaded connection

Ref. Code	Product Description
ASFN25	Foam Nozzle 1" OA design

TECHNICAL SPECIFICATION

MODEL	ASFN25	
CONNECTION IN INCH	1"	
ORIFICE IN mm	32	
FLOW DETAILS	Flow (LPM)	Head (Mtr)
Spray Height in Meter		
0.25	47	1.00
0.50	55	1.30
0.75	71	2.10
1.00	80	2.70
1.25	89	3.30
1.50	97	3.90
1.75	104	4.60
2.00	111	5.20
2.50	123	6.40

Noise: ●●●●● Visibility: ●●●●● Splash/Mist: ●●●●● Wind Resistance: ●●●●● Aeration effect: ●●●●●

FOUNTAIN NOZZLES

Ref. Code	Product Description
ASFN40	Foam Nozzle 1 1/2" OA Design
ASFN50	Foam Nozzle 2" OA Design

FOAM NOZZLE

- Foam Nozzles generate a thick, wind resistant display that uses little water.
- Foamy white water offers a strong contrast to surroundings while enriching oxygen content.
- These Nozzles are water level independent.

TECHNICAL SPECIFICATION

MODEL	ASFN40		ASFN50	
CONNECTION IN INCH	1 1/2"		2"	
ORIFICE IN mm	75		75	
FLOW DETAILS	Flow (LPM)	Head (Mtr)	Flow (LPM)	Head (Mtr)
Stream Height in Meter				
0.3	125	3.7		
0.6	150	5.0		
1	175	6.3	327	6.7
1.5	235	11	432	11.3
2	250	12.7	462	13
2.5	282	16	516	16.3

ROTATING NOZZLE

- This rotating nozzle offers an impressive dancing display with low water use.
- Rotation is by the angled smooth bore jets rotating around the centre jet or jets, height & speed can be adjusted by arm arc or valve in line The Peacock includes a Finger Jet
- Water level independent.

Ref. Code	Product Description
ASRN25	Rotating Nozzle 1"

TECHNICAL SPECIFICATION

MODEL	ASRN12		ASRN25		ASRN40		ASRN50		ASRN75		ASRN100	
CONNECTION IN INCH	1/2"		1"		1 1/2"		2"		3"		4"	
FLOW DETAILS	Flow (LPM)	Head (Mtr)	Flow (LPM)	Head (Mtr)	Flow (LPM)	Head (Mtr)	Flow (LPM)	Head (Mtr)	Flow (LPM)	Head (Mtr)	Flow (LPM)	Head (Mtr)
Spray Height in Meter												
1.0	10.6	1.4	54	1.6	99	1.6						
1.5	14.3	2.3	67	2.3	149	2.3	358	2.2				
2.0	16.8	3.0	79	3.2	182	2.8	423	2.8	495	2.9	593	3.2
3.0	21.5	4.8	95	4.5	221	4.9	528	4.9	603	4.9	830	5.3
4.0			110	6.0	261	6.8	631	6.9	709	6.4	906	6.8
5.0			125	7.1	288	7.8	702	7.7	785	7.7	972	8.3
6.0					334	8.9	778	9.3	855	9.1	1025	10.1
7.0							829	10.6	921	4.8	1136	12.2
8.0							901	12.8	985	13.9	1238	14.3
10.0									1085	18.3	1410	17.8
12.0											1540	19.8

Noise: ●●●●○ Visibility: ●●●●○ Splash/Mist: ●●●○○ Wind Resistance: ●●●○○ Aeration effect: ○○○○○

FOUNTAIN NOZZLES

Ref. Code	Product Description
ASBN25SS	1" Bell Nozzle in SS
ASBN40SS	1 1/2" Bell Nozzle in SS

BELL NOZZLE

- Creates bell or crystal dome effect.
- Clear dome subject to wind distortion.
- Recommended for indoor application.
- Stainless steel finish, female threaded connection.

TECHNICAL SPECIFICATION

MODEL	ASBN25SS		ASBN40SS	
CONNECTION IN INCH	1"		1 1/2"	
FLOW DETAILS	Flow (LPM)	Head (Mtr)	Flow (LPM)	Head (Mtr)
Spray Dia in mm				
250	35	0.3	75	1
500	45	0.1	85	1.2
750	55	1	90	1.5
1000	70	1.5	110	1.8

Noise: ●●●●● Visibility: ●●●●● Splash/Mist: ●●●●● Wind Stability: ●○○○○ Aeration effect: ●○○○○

CASCADE NOZZLE

- Creates a highly aerated Pin Tree shaped geyser effect at water.
- Water level dependent.
- Baffle wall recommended when used in symmetrical pools.
- Very good against wind, with high noise level & low clogging possibility.
- Stainless steel finish, female threaded connection.

Ref. Code	Product Description
ASCN25SS	1" Cascade Nozzle In SS
ASCN40SS	1 1/2" Cascade Nozzle in SS
ASCN50SS	2" Cascade Nozzle In SS
ASCN75SS	3" Cascade Nozzle in SS

TECHNICAL SPECIFICATION

MODEL	ASCN25SS		ASCN40SS		ASCN50SS		ASCN75SS	
CONNECTION IN INCH	1"		1 1/2"		2"		3"	
ORIFICE IN mm	4		6		8		10	
FLOW DETAILS	Flow (LPM)	Head (Mtr)	Flow (LPM)	Head (Mtr)	Flow (LPM)	Head (Mtr)	Flow (LPM)	Head (Mtr)
Spray Height in Meter								
0.5	48.7	1.6	78.7	2				
1			111.2	4.3	181.2	4	388.7	2.9
1.5			137.5	6.7	211.2	5.2	476.2	4.2
2					243.7	6.9	550	5.5
2.5					268.7	8.3	620	6.8
3							662.5	7.9
4							757.5	10.2
5							841.2	12.4
6							917.5	14.8

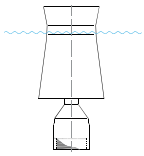

Noise: ●○○○○ Visibility: ●●●●● Splash/Mist: ●●○○○ Wind Stability: ●●●○○ Aeration effect: ●●●●●

FOUNTAIN NOZZLES

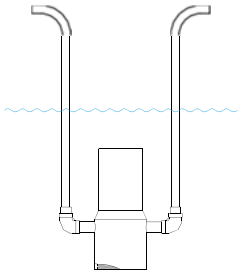

BUBBLER NOZZLE

- Creates a highly aerated mound of water.
- Comes with Snorkel pipe which has to be above water level.
- Water level dependent.
- Baffle wall recommended when used in symmetrical pools.
- Very good against wind, with moderate noise level & low clogging possibility.
- Stainless steel finish, female threaded connection.

Ref. Code	Product Description
ASBU25SS	1" Bubbler Nozzle in SS
ASBU40SS	1 1/2" Bubbler Nozzle in SS
ASBU50SS	2" Bubbler Nozzle in SS

TECHNICAL SPECIFICATION

MODEL	ASBU25SS		ASBU40SS		ASBU50SS	
CONNECTION IN INCH	1 "		1 1/2"		2"	
ORIFICE IN mm	3		5		6	
FLOW DETAILS	Flow (LPM)	Head (Mtr)	Flow (LPM)	Head (Mtr)	Flow (LPM)	Head (Mtr)
Spray Height in Meter						
0.5	80	1	158.7	2		
1			206.2	3.3	296.2	2.7
1.5			243.7	4.5	350	3.7
2					395	4.6
2.5					445	5.8
3						
3.5						
4						

Noise: ●●●○○ Visibility: ●●●●● Splash/Mist: ●●○○○ Wind Stability: ●●●●● Aeration effect: ●●●●●

ADJUSTABLE FLANGE

FEATURES:

- Adjustable flanges are used to align those jets and nozzles that do not have a swivel base incorporated.
- Required directional adjustment beyond 5 to 15 off centerline for 1"
- Maximum 5 degree of adjustment from center line is possible for other models
- To adjust, loosen bolts on opposite side to intended direction of adjustment and tighten bolt in line of intended adjustment then lock all bolts
- Material of construction is Stainless steel 316

TECHNICAL SPECIFICATION

Ref. Code	BSP
ASAJF25SS	1"
ASAJF40SS	1 ½"
ASAJF50SS	2"
ASAJF75SS	3"

Ref. Code	Product Description
ASAJF25SS	Adjustable Flange 1"-Threaded (all SS316)
ASAJF40SS	Adjustable Flange 1 1/2"- Flanged (all SS316)
ASAJF50SS	Adjustable Flange 2"- Flanged (all SS316)
ASAJF75SS	Adjustable Flange 3"- Flanged (all SS316)

FOUNTAIN NOZZLES

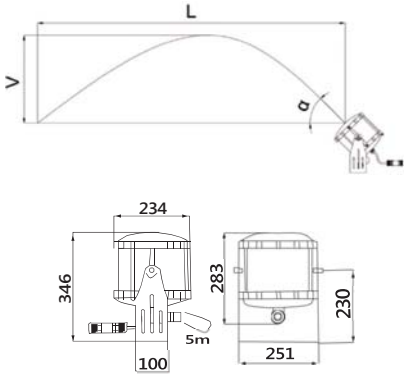

Dimensions (in mm)

COMPACT RAINBOW JET

The COMPACT RAINBOW JET is a nozzle that develops an illuminated laminar water jet, giving the water a unique aspect, producing a striking visual aspect for the viewer. In its compact design we have incorporated a high power RGBW LED that dramatically illuminates the water parabola in its entirety.

Due to its compact design and small dimensions, it is easy to use in any installation that combined with its low splash and low level of noise, makes it ideal for small gardens, and a complementary element of any source.

TECHNICAL SPECIFICATION

* Rainbow Jet use is recommended with low environmental light.
Maximun 180 lx
Lights used: 18W/12V RGB

Dimensions								Performance				
Ref.Code	Connection	Outlet	Weight	Power	Voltage	Elec. Connection	Jet angle	Horizontal range	1	2	3	4
	BSP-NPT	(mm)	(kg)				a	(m) L				
ASLJ	G1" F/H(*)	Ø14	17,0	10W	24V DC	0,5m cable	30º	l/min	18,00	25,00	30,00	34,00
						with IP68		m.c.a*	0,90	1,60	2,40	3,00
						connector		Height (m) V	0,19	0,32	0,47	0,56
							45º	l/min	17,20	23,50	30,00	35,00
								m.c.a*	0,90	1,50	2,20	2,80
								Height (m) V	0,33	0,54	0,80	1,06
							60º	l/min	19,00	26,00	32,00	36,60
								m.c.a*	1,00	1,80	2,40	3,20
								Height (m) V	0,53	0,97	1,38	1,83
							75º	l/min	24,40	35,50		
								m.c.a*	1,60	3,00		
								Height (m) V	1,10	2,00		

*m.c.a - meters water column.

Noise: Visibility: Splash/Mist: Wind Appearance: Wind Resistance:

INTERACTIVE JET

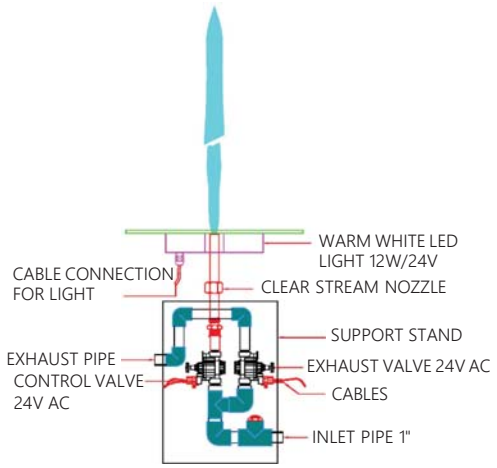

FRONT VIEW

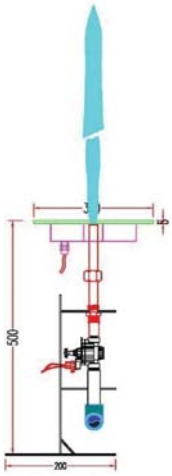

SIDE VIEW

FEATURES:

SPECIFICATIONS

The water switch 601 series was born to create a choreographic display of water. Thanks to the twin solenoid valve technology a perfect of water is formed. To reach the perfect water movement, the solenoid valve can open up to 60 times in a minute. The water Switch 601 is completely made of stainless steel. It can operate with the least possibility to control systems of all kinds of fountains; it needs only one output device to the fountain's main computer. Use a pump with frequency controlled motor to reach the perfect display of water.All made of 316 SS

- Vertical or horizontal valve installation
- Max. Flow: 100Liters/Min.
- Operating voltage: 24V AC
- Height: 5500mm Standard. Different variation possible.
- Width: 200mm.
- Max. Pressure: 10.3bar.
- Programmable dry deck kit.
- Includes with Round/ Square Top cover
- Flush mounted/Trip safe.
- Twin 9W RGB or 12W Ring light options available
- Inlet connection 1"
- No water hammer fault possibility